Lab 1:Measurements and Uncertainty

Introduction

In this lab, you will learn how to take measurements using some of our most frequently used instruments, as well as how to determine the uncertainty in those measurements.

Equipment

(per group)

Meter Stick
Vernier Caliper
Double Meter Stick
White Block

Background

I. There is uncertainty in ALL measurements.

In lecture you will learn how to solve problems and perform calculations. The numbers involved in these calculations represent real, physical quantities that must be measured. As a simple example, you may encounter a problem that says, "A block slides a distance of 1.23 m in a time of 0.456 s." Here in lab, we will focus not only on how to perform calculations with these numbers but also on how those numbers are determined and how sure we can be about those numbers. Uncertainty (or random error[1]) in scientific measurements is unavoidable regardless of how carefully the measurements are made. Uncertainties can be reduced by using higher precision instruments, but they can never be eliminated entirely. Next we will discuss a few different ways of expressing the uncertainty in a measurement.

In lecture, uncertainty in a measurement will be indicated by the number of significant figures it contains. For example, a length measurement of 5 cm means that the length is closer to 5 cm than it is to 4 cm or 6 cm. For comparison, consider a length measurement of 5.0 cm. Although this is numerically equivalent to the first measurement of 5 cm, it has a different number of significant figures and thus a different meaning. A measurement of 5.0 cm means that the length is closer to 5.0 cm than it is to 4.9 cm or 5.1 cm. Since this second measurement has a smaller uncertainty, we say it is a higher precision measurement.

In lab, instead of assuming an uncertainty based on the number of significant figures, a better way of indicating the uncertainty in a measurement is to give a **best estimate** for the value plus or minus some uncertainty. For instance, say a student measures the width, *w,* of this piece of paper to be

$$w = (21.47 \pm 0.05) \text{ cm.}$$

The student is claiming that his best estimate for the width of the paper is 21.47 cm and the true value of the width probably lies between 21.42 cm and 21.52 cm. Symbolically we would write this as

$$w = w_{\text{best}} \pm \delta w \,,$$

[1] Scientists use the term "random error" to mean uncertainty, not a mistake. We will generally try to avoid the use of the word error to avoid confusion.

where $w_{\text{best}} = 21.47\,\text{cm}$ and $\delta w = 0.05\,\text{cm}$. The value δw that comes after the ± sign and which is spoken as "delta *w*," is called the **absolute uncertainty**. Notice that it has the same units as the best estimate. The absolute uncertainty is technically the standard deviation of the probability distribution for obtaining a particular value. A detailed statistical analysis is beyond the scope of this class, but it is useful to note that the statement $w = w_{\text{best}} \pm \delta w$ really means that there is about a 68% probability that the true value of the width lies between $w_{\text{best}} - \delta w$ and $w_{\text{best}} + \delta w$. This leaves about a 32% probability that the true value of the width lies slightly outside of this range.

Another common and useful way of expressing the uncertainty is to consider what fraction, or percentage, it is of the best estimate. This is called the **fractional, or relative, uncertainty** and it is equal to the absolute uncertainty divided by the best estimate.[2] For the student's measurement of the width of the paper, the fractional uncertainty would be

$$\frac{\delta w}{w_{\text{best}}} = \frac{0.05\,\text{cm}}{21.47\,\text{cm}} \approx 0.00233\,.$$

Notice that since the absolute uncertainty always has the same units as the best estimate, the units will cancel and the fractional uncertainty never has any units. To get an idea of what the fractional uncertainty means, you can also think of it as a percentage by multiplying by 100%. In this case, we could say that the uncertainty is 0.233% of the best estimate.

II. How do you determine the uncertainty in a measurement?

Each instrument has an instrument uncertainty. The **instrument uncertainty** is the amount of uncertainty inherent in a measurement based on the limitations of the instrument. It is impossible to eliminate this uncertainty and the instrument uncertainty is the minimum uncertainty possible in a measurement. Instrument uncertainties are determined from the **least count** of the instrument. Some general guidelines for determining the least count and uncertainty of an instrument are given below.

> <u>For analog instruments:</u> The least count is the smallest division marked on the instrument. When reading an analog instrument you should estimate in between the division markings to the nearest tenth of the least count. The instrument uncertainty is typically either a third or a half of the least count, but there are exceptions.
>
> <u>For digital instruments:</u> The least count is a one in the last decimal place displayed by the device. The instrument uncertainty depends on the nature of the digital device, specifically on whether the device has the capability to round the value when it reports the last digit. If the instrument rounds the value, then the uncertainty is half of the least count. If the instrument does not round (i.e. it simply truncates the number at the end), then the uncertainty is equal to the least count.

As mentioned above, the instrument uncertainty is only the minimum uncertainty possible in a measurement. Sometimes a measurement may have an uncertainty greater than the instrument uncertainty if there is some difficulty in taking the measurement. For example, if you are using a meter stick to make a length measurement and the meter stick must be held in an awkward way in order to take the reading, the measurement uncertainty should be greater than the instrument

[2] Technically, all uncertainties should be positive and the denominator should therefore be the absolute value of the best estimate; however, since nearly all of the quantities we will encounter will be positive, the absolute value symbol will be omitted.

uncertainty. There is no rule for determining how much greater the uncertainty should be. It is entirely a judgment call. On the other hand, if the meter stick is simply laid on a table and can be carefully lined up with the object being measured, then the instrument uncertainty should suffice.

A few of the instruments will be used so frequently that we will discuss them in more detail here.

Meter Stick

On the meter stick, each centimeter line is numbered and in between each centimeter line there are ten divisions. Therefore the least count for the meter stick is 0.1 cm (or 1 mm). You should check the meter stick to see if you can verify this. The instrument uncertainty for the meter stick actually depends on how the meter stick is being used. If you are taking a single reading as to where a particular mark hits the meter stick, the instrument uncertainty is 0.03 cm (~1/3 of the least count). However, if you are measuring the length of an object, this is actually the difference between the two readings at each end of the object. The uncertainty should be greater in this case and we will use 0.05 cm (1/2 of the least count). The vast majority of the time you will be using the meter stick to measure a length and not just a single reading and you will thus use the latter value for the instrument uncertainty.

There are a few other important things to remember when using a meter stick.

> Whenever possible, you should avoid using the end of the meter stick. The meter sticks we will use are very carefully calibrated except for the ends. If you need to measure the length of an object, it is best to line up one end at the 10.0 cm mark and then subtract 10.00 cm from the reading at the other end. Sometimes, however, using the end of a meter stick cannot be avoided. For example, if you were to measure the height of the lab table, you would need to place one end of the meter stick on the floor. This is another case where it would be justifiable for the uncertainty of your measurement to be slightly greater than the instrument uncertainty.
>
> As previously stated, the least count of the meter stick is 0.1 cm and when using an analog instrument, you should estimate in between the division markings to the nearest tenth of the least count. So, all meter stick measurements should be stated to the nearest 0.01 cm. As an example, suppose you are to measure the length of an object that is very nearly 20 cm long. You would carefully line up one end of the object with the 10.0 cm mark of the meter stick. If it appears to you that the other end of the object lines up very nearly with the 30.0 cm mark, you would state your measurement for the length as (20.00 ± 0.05) cm. If it appears to you that the other end of the object lines up just slightly past the 30.0 cm mark, you would state your measurement for the length as (20.01 ± 0.05) cm or maybe (20.02 ± 0.05) cm depending on how far past the 30.0 cm mark it is. It would be incorrect to state your measurement as (20 ± 0.05) cm or (20.0 ± 0.05) cm because these do not have enough significant figures.
>
> When using a meter stick, you should always be careful to try to avoid parallax. Parallax is an error that can occur when the meter stick cannot be placed right up against the object that is being measured. This can also occur simply due to the thickness of the meter stick itself. Depending on where you line up your eye, you will see different readings unless the markings of the meter stick are right up against the object. If the meter stick cannot be placed directly next to the object, the uncertainty should be greater than the instrument uncertainty.

Vernier Caliper

The Vernier caliper is another device for measuring length. A diagram of the instrument is shown in Figure 1.1. The centimeter scale on the Vernier caliper is the same as on the meter stick, so the least count is also 0.1 cm. However, it also has a movable Vernier scale attached to it, which is designed to help you better estimate between the lines. This allows for a higher level of precision than the meter stick and thus a smaller instrument uncertainty. The instrument uncertainty for the Vernier caliper is only 1/10 of the least count, 0.010 cm.

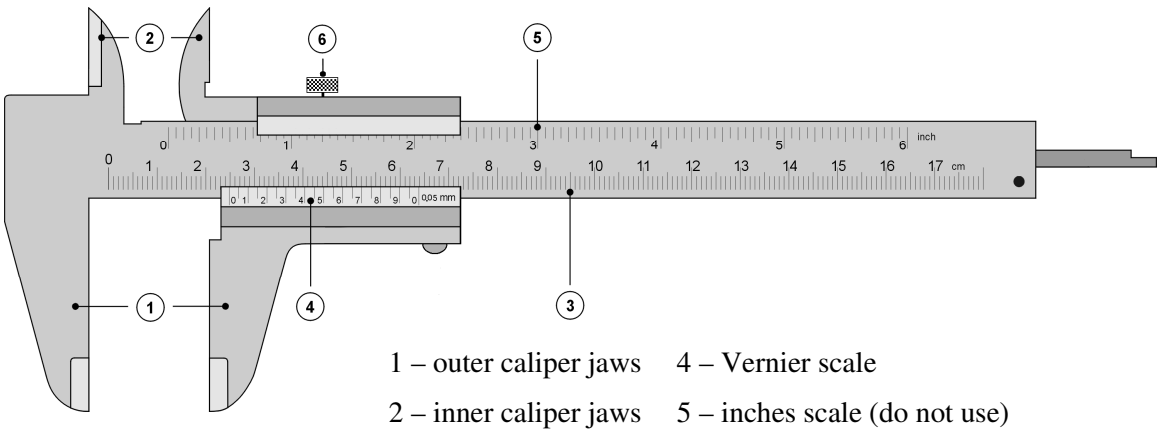

1 – outer caliper jaws 4 – Vernier scale

2 – inner caliper jaws 5 – inches scale (do not use)

3 – centimeter scale 6 – tightener knob

Figure 1.1: Parts of the Vernier caliper

Your instructor will demonstrate for each group how to read the Vernier scale, but there are a few important things to note.

> Sometimes the centimeter scale is on the top and sometimes it is on the bottom. Always check this first and be sure to use the centimeter scale and not the inches scale.
>
> When the caliper jaws are closed, the zero line on the centimeter scale lines up with the zero line on the Vernier scale. So when you open the caliper jaws, you can find the length by looking at where the zero line of the Vernier scale falls on the centimeter scale. Do not look at where the edge of the Vernier scale falls on the centimeter scale.
>
> The position of the zero line of the Vernier scale will give you the length to one digit past the decimal (in cm). Reading the Vernier scale will give you two more digits past the decimal. So, all Vernier caliper measurements should be stated to three digits past the decimal (in cm). However, the last digit will always be either a 0 or a 5.

Digital Balance

The digital balance that we will use can measure the mass of an object to the nearest tenth of a gram; therefore the least count is 0.1 g. The digital balance rounds to the nearest least count. Therefore the instrument uncertainty is half the least count, 0.05 g.

It is important to ensure that the display reads 0.0 g BEFORE you place the object on the balance. If it is turned off, you will have to wait several seconds after you turn it on. If it is already turned on and does not read 0.0 g, you will need to press a button to zero it.

Digital Timer

The digital timer has a low precision mode and a high precision mode. When the timer is in the low precision mode, it displays the time to the nearest thousandth of a second; therefore the least count is 0.001 s. When the timer is in the high precision mode, it displays the time to the nearest ten thousandth of a second; therefore the least count is 0.0001 s. You should be able to tell which mode the timer is in by simply looking at the display and counting how many decimal places are shown.

When the timer is started, it starts running and continues to run until it is triggered to stop. It, therefore, does not round the time values that it displays. You should, whenever possible, reset the timer to zero before starting it. If you do this, the instrument uncertainty for a single measurement is equal to the least count. If you are unable to reset the timer to zero and you must measure the time by finding the difference between the final reading and the initial reading, then the uncertainty is twice the least count.

There are a few more details about the digital timer that will be included here for completeness, but you will not be using the timer until Lab 7. A diagram of the timer is shown in Figure 1.2.

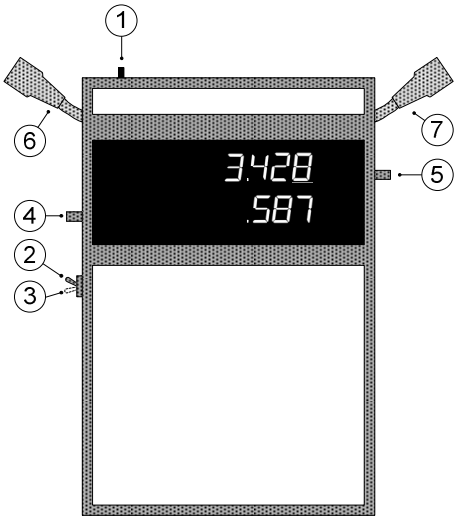

Figure 1.2: Parts of the digital timer

1 – Reset Button

2 – Low Precision Switch Position

3 – High Precision Switch Position

4 – Left Triggering Mode Selector

5 – Right Triggering Mode Selector

6 – Left Input

7 – Right Input

In this figure, the timer is in the low precision mode. The time from the right input is 3.428 s and the time from the left input is 0.587 s.

Aside from the difference in least count, there is another difference between the low precision mode and the high precision mode. There are two lines on the display of the timer. When the timer is in low precision mode, it can actually act as two timers. There are two places to attach the inputs to the timer, one on the right and one on the left. The time from the right input will be displayed on the top line and the time from the left input will be displayed on the bottom line. Figure 1.2 shows the display when the timer is in low precision mode.

If you only need one timer, you should always use the timer in high precision mode so that you can obtain higher precision data. When the timer is in high precision mode, the top line will display the number of seconds and the bottom line will display the decimal places. If there are no digits displayed in the top line, then the time is less than one second. Figure 1.3 shows the timer display when it is in high precision mode.

Regardless of which mode the timer is in, it is important to note that the timer does not display leading 0s. If you see an empty space between the decimal point and the numbers displayed, that empty space is really a 0. Figure 1.3(a) shows an example of this.

(a)

(b)

Figure 1.3: Digital timer display in high precision mode

In these figures, the timer is in the high precision mode. In figure (a), the time displayed is 16.0251 s. In figure (b), the time displayed is 4.3587 s.

There is another important setting on the timer and that is the one that controls when the timer is triggered to start and stop. There are three different possible triggering modes called Gate, Pulse, and Pendulum. We will not go into the details of these three modes. The important thing is that in an experiment, before you start taking data, you should always perform a trial run and check to see if the timer is starting and stopping when you want it to. If it is not, try a different triggering mode.

Table 1.1 lists the least counts and uncertainties for the instruments we use in this course. By the end of the semester (preferably much sooner than that), you should know the instrument uncertainties for the instruments discussed above. Although you may use this table for reference, if you understand the ideas discussed here, you should not need to memorize the instrument uncertainties.

Table 1.1: Least Counts and Instrument Uncertainties

Instrument	**Least Count (*lc*)**	**Uncertainty for a Single Reading**	**Uncertainty for a Sum or Difference**
Meter Stick	0.1 cm	0.03 cm	**0.05 cm**
Vernier Caliper	0.1 cm	**0.010 cm**	----------
Digital Balance	0.1 (g or gwt)	**0.05 (g or gwt)**	----------
Digital Timer (Low Precision)	0.001 s	**0.001 s**	0.002 s
Digital Timer (High Precision)	0.0001 s	**0.0001 s**	0.0002 s
Force Table Angle	1°	0.3°	0.5°
Hand-held Spring Scale	20 (g or gwt)	----------	10 (g or gwt)
Analog Timer	0.01 s	----------	0.005 s

(The instrument uncertainties that are used most often have been marked in bold.)

III. Discrepancy Test

The purpose of most of our experiments will be to show that the results of the experiment are consistent with the theoretical predictions. Although achieving this goal would not "prove" the theory to be correct, it would add to the body of evidence that supports the theory. In this course, the theories that will be tested are so well-established that inconsistent results are more likely to indicate the presence of systematic errors rather than a flaw in the theory.

In all the experiments, the experimental result will be a measured quantity and thus have some uncertainty. In most of the experiments, the theoretical result will also be a measured quantity because the theory will involve a formula that requires a calculation of other measured quantities. Because these values will not be exact, it will be extraordinarily rare for the best estimates to be exactly the same. We define the **discrepancy** to be the absolute value of the difference between the best estimates. Symbolically, if the experimental value is $A = A_{\text{best}} \pm \delta A$ and the theoretical value is $B = B_{\text{best}} \pm \delta B$, then the discrepancy is

$$\text{Discrepancy} = \left| A_{\text{best}} - B_{\text{best}} \right|$$

Since there is uncertainty in the values, we do not need the discrepancy to be zero. Obviously, a large discrepancy is unacceptable. We want the discrepancy to be as small as possible to claim that the two values are consistent with one another. The question is, how small is small enough?

The fact that there is uncertainty involved means that you know only the range within which the true value *probably* lies. The ranges of the two values will overlap each other if the discrepancy between their best estimates is less than or equal to the sum of the uncertainties, as shown graphically in Figure 1.4. The discrepancy can be visualized by the distance between the best estimates. Notice that in the first experiment, the discrepancy is less than the sum of the uncertainties and the probable ranges overlap. In the second experiment, the discrepancy is greater than the sum of the uncertainties and the probable ranges do not overlap.

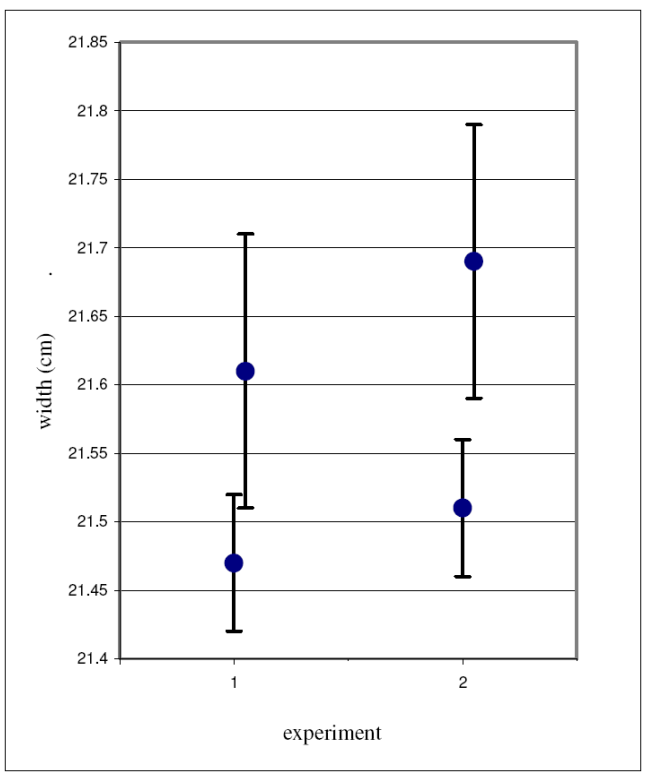

Figure 1.4: Graphical representation of discrepancy

The experimental and theoretical values are shown on a graph for two different experiments. The best estimates are represented by dots. To represent the probable ranges of the values, error bars are drawn that extend above and below the best estimate by amounts equal the corresponding uncertainties. The numerical values displayed are given below.

Experiment 1:

$$A_1 = (21.47 \pm 0.05) \text{ cm}$$

$$B_1 = (21.61 \pm 0.10) \text{ cm}$$

Experiment 2:

$$A_2 = (21.51 \pm 0.05)\ \text{cm}$$
$$\text{B}_2 = (21.69 \pm 0.10)\ \text{cm}$$

However, since the ranges of the values are only *probable* ranges, we will use a less stringent criterion to decide if the measurements are consistent with each other. Instead of requiring the discrepancy to be less than the sum of the uncertainties, we will require it to be less than twice the sum of the uncertainties. This is called the **tolerance** because it is the maximum discrepancy that we are willing to tolerate. Symbolically, the tolerance can be written as,

$$\text{Tolerance} = 2(\delta A + \delta B)$$

The **discrepancy test** can thus be stated as follows:

> **Discrepancy Test**:
>
> Two measurements, $A = A_{\text{best}} \pm \delta A$ and $B = B_{\text{best}} \pm \delta B$, are said to agree with each other if the discrepancy is less than or equal to the tolerance, or $|A_{\text{best}} - B_{\text{best}}| \le 2(\delta A + \delta B)$.

Now you may be asking, "Why are we considering these values to agree if their ranges do not have to overlap?" What the discrepancy test technically says is that, if the true values of *A* and *B* are equal, then there is a 95% probability that your discrepancy will be less than the tolerance. Again, a detailed analysis of the statistics is beyond the scope of this class.

IV. What if you fail the discrepancy test?

As stated earlier, the theories that we will be testing in this class are very well established and you should hope to pass the discrepancy test for most of your experiments. There are three reasons why you might fail the discrepancy test: you made a mistake, there are systematic errors, and/or it is a statistical anomaly.

You Made a Mistake

If you make a mistake, you are expected to go back and fix it. This mistake could be a calculation mistake, a measurement mistake, or your uncertainties may be too small. The first thing you should do is go back and check for one of these possibilities. You should check with your lab partners at this point to see if they have also failed the discrepancy test and you can work together to try to find where you went wrong. If you find one of these mistakes, it should be relatively easy to correct. The mistake could also have been in the setup of the experiment. This type of mistake usually takes longer to fix because it is likely that you will have to retake all of your measurements and redo all of your calculations, but you should do it if you have time left in the class.

Systematic Errors

If you have rechecked all of your work and the experimental setup and you cannot find any mistakes, then it is most likely that there is a significant systematic error in your experiment. **Systematic errors** are flaws in the experiment that will cause your experimental result to either always be too big or always be too small. Common systematic errors are air resistance, friction, and the table and/or floor not being level. Systematic errors can also be caused if the instruments are not calibrated properly. For example, the lines on the meter stick may be closer or farther apart than they should be. You should always try to anticipate what systematic errors there may be in your experiment and do what you can to reduce them as much as possible.

Systematic errors are not to be confused with random errors. **Random errors** are those that cause your measurements to be sometimes too big or sometimes too small, with equal probability. Random errors should not cause your results to fail the discrepancy test because they are accounted for with your uncertainties.

To attribute the failure of the discrepancy test to a systematic error, you must fail it the right way. For example, suppose that you have calculated the theoretical velocity of some object to have a certain value, but your theory neglects the effects of friction. Friction would be an example of a systematic error because it always causes objects to slow down, not to speed up. Then you measure the experimental value of the velocity and the result does not pass the discrepancy test with the theoretical value, but the best estimate of the experimental value is greater than that of the theoretical value. This would not be consistent with the expected effect of friction and you would need to find a different reason why your theoretical and experimental results disagree.

Statistical Anomaly

Even if you have not made any mistakes and you have somehow managed to eliminate all systematic errors from the experiment, statistically there is still about a 5% probability that your results will not pass the discrepancy test. If you have time, you should redo the experiment.